PRODUCED BY AN AUTODESK EDUCATIONAL PRODUCT

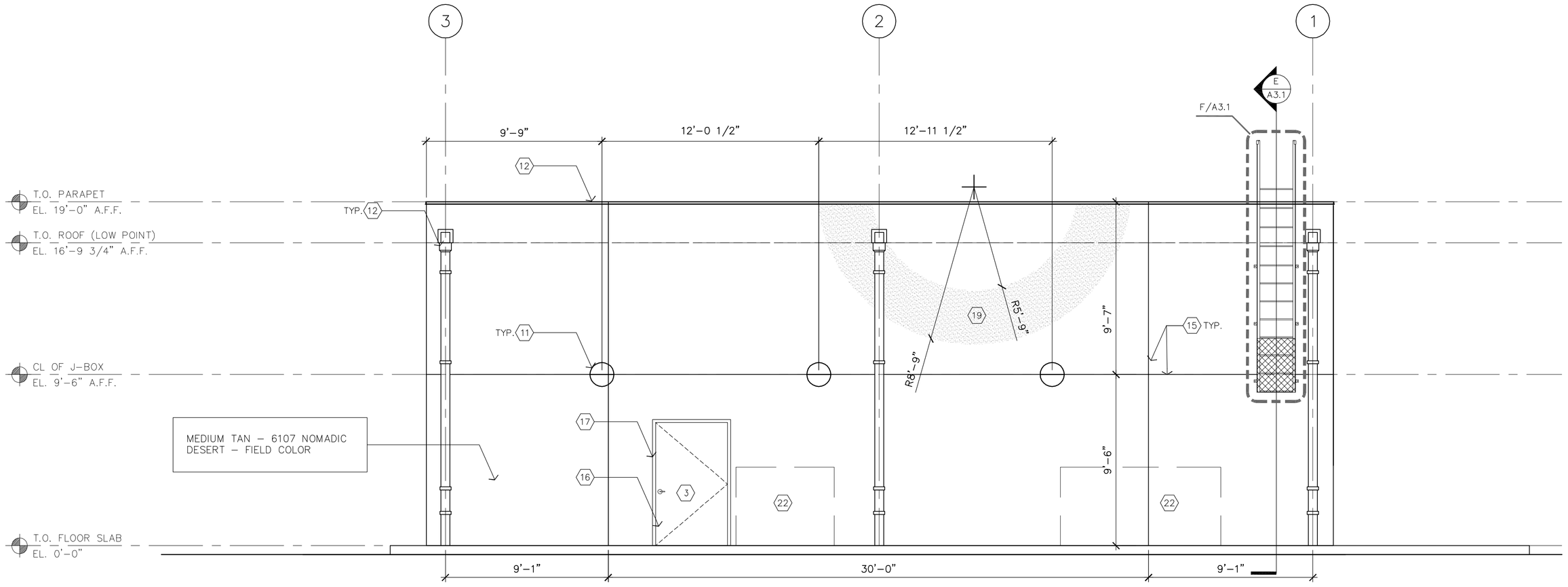

D. NORTH(REAR) ELEVATION
SCALE- 1/4"= 1'-0"

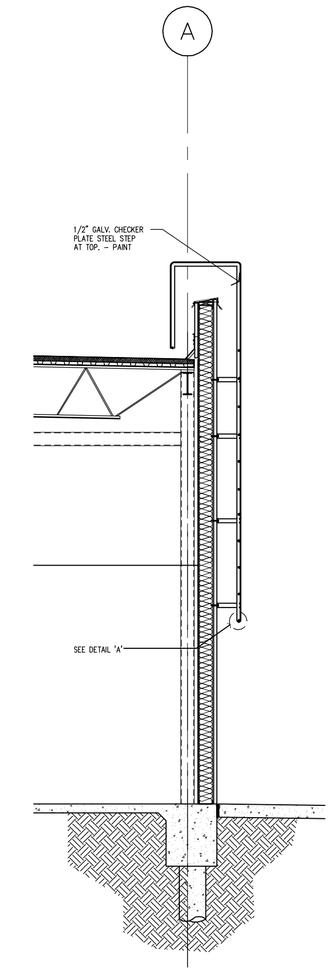

E. WALL SECTION
SCALE- 1/4"= 1'-0"

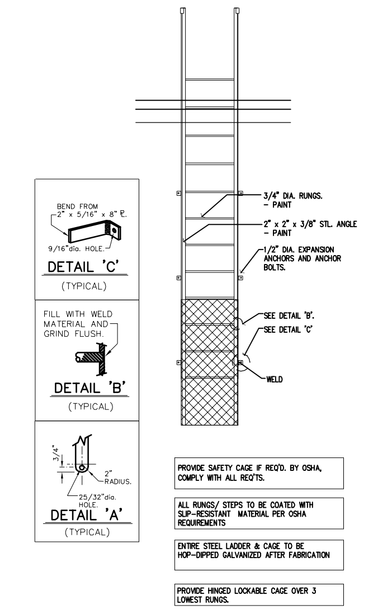

F. ENLARGED ELEV. DETAILS
SCALE- 1/4"= 1'-0"

ROOFING/FLASHING/TRIM R-#

CODE	MATERIAL	MANUFACTURER/SUPPLIER	PRODUCT	SERIES	COLOR	DIMENSION	ADDITIONAL INFORMATION
R-1	STANDING SEAM METAL ROOF	COPPER SALES, INC.	UNA-CLAD ARCH. METAL ROOFING	UC-1 SNAP-ON SEAM ARCH. SERIES	MATT BLACK	12" WIDE, 24 GA.	CONTACT: (800) 426-7737.
R-2	METAL COPING & FLASHING	COPPER SALES, INC.	UNA-CLAD ARCH. METAL ROOFING	COIL STOCK	BONE WHITE	24 GA	CONTACT: (800) 426-7737.
R-3	CONDUCTOR HEADS, DOWNSPOUTS & TRIM	COPPER SALES, INC.	UNA-CLAD ARCH. METAL ROOFING	COIL STOCK	MATT BLACK	24 GA	CONTACT: (800) 426-7737.

CULTURED STONE CS-#

CODE	MATERIAL	MANUFACTURER/SUPPLIER	PRODUCT	SERIES	COLOR	DIMENSION	ADDITIONAL INFORMATION
CS-1	MANUFACTURED STONE	OWENS CORNING	CULTURED STONE	COUNTRY LEDGESTONE	CHARDONNAY (CVS-20006)	----	CONTACT:(800)225-7642,MORTAR-"M-1"
CS-2	MANUFACTURED STONE SILL	OWENS CORNING	CULTURED STONE	WATERTABLES/SILLS	TAUPE (SWT-1375)	2"X3"2 1/2"X18"L	CONTACT:(800)225-7642,MORTAR-"M-1"

MORTAR M-#

CODE	MATERIAL	MANUFACTURER/SUPPLIER	PRODUCT	SERIES	COLOR	DIMENSION	ADDITIONAL INFORMATION
M-1	MORTAR	ESSROC CEMENT CORP.	FLAMINGO - BRIXMENT	MASONRY MORTAR	B-133 "LIGHT bUFF"	----	CONTACT:(800)4ESSROC

STUCCO ST-#

CODE	MATERIAL	MANUFACTURER/SUPPLIER	PRODUCT	SERIES	COLOR	DIMENSION	ADDITIONAL INFORMATION
ST-1	STUCCO	OMEGA PRODUCTS INTL.	3 COAT SYSTEM	PORTLAND CEMENT W/ OMEGA FLEX TOP COAT	WHITE TO MATCH R-2	----	CONTACT:(800)600-6634

STUCCO ST-#

CODE	MATERIAL	MANUFACTURER/SUPPLIER	PRODUCT	SERIES	COLOR	DIMENSION	ADDITIONAL INFORMATION
ST-1	STUCCO	OMEGA PRODUCTS INTL.	3 COAT SYSTEM	PORTLAND CEMENT W/ OMEGA FLEX TOP COAT	WHITE TO MATCH R-2	----	CONTACT:(800)600-6634

EXTERIOR PAINT XP-#

CODE	MATERIAL	MANUFACTURER/SUPPLIER	PRODUCT	SERIES	COLOR	DIMENSION	ADDITIONAL INFORMATION
XP-1	PAINT	SHERWIN WILLIAMS	DURATION	SATIN FINISH #K33	SW6918 HUMOROUS GREEN	----	REFER TO EXTERIOR ELEVATIONS FOR LOCATION.
XP-2	PAINT	SHERWIN WILLIAMS	DURATION	SATIN FINISH #K33	SW(T.B.D.) (DARK TAN)	----	REFER TO EXTERIOR ELEVATIONS FOR LOCATION.
XP-3	PAINT	SHERWIN WILLIAMS	DURATION	SATIN FINISH #K33	SW(T.B.D.) (LIGHT TAN)	----	REFER TO EXTERIOR ELEVATIONS FOR LOCATION.
XP-4	PAINT	SHERWIN WILLIAMS	DURATION	GLOSS #K34	BLACK TO MATCH R-3	----	REFER TO EXTERIOR ELEVATIONS FOR LOCATION.
XP-5	PAINT	SHERWIN WILLIAMS	DURATION	GLOSS #K34	WHITE TO MATCH R-2	----	LATEX SEMI-GLOSS FINISH. REFER TO EXTERIOR ELEVATIONS FOR LOCATION.

ELEVATION PLAN KEY NOTES:

1. METAL COPING - PREFINISHED R-2
2. STUCCO FINISH
3. STEEL CANOPY - PAINT XP-4
4. STOREFRONT SYSTEM - REFER TO FLOOR PLAN & WINDOW SCHEDULE
5. FAUX STONE SILL CS-2
6. FAUX STONE FINISH SYSTEM CS-1
7. SIDEWALK OR CURB - REFER TO SITE DETAILS SHEET
8. SIGNAGE - REFER TO ELECTRICAL DRAWINGS
9. WALL/PARAPET FIN - REFER TO FLOOR PLAN & ROOF PLAN FOR REFERENCED DETAILS.

9A. SAME AS 9 EXCEPT PAINT ALL SIDES OF PARAPET FIN @ SCHLOTZSKY'S XP-1

10. STANDING SEAM MTL. ROOF @ BARREL CANOPY R-1
11. LIGHT FIXTURE - REFER TO ELECTRICAL DRAWINGS
12. SCUPPER, CONDUCTOR HEAD & DOWNSPOUT R-3
13. DOWNSPOUT SHALL SPILL TO SIDEWALK TRENCH/OR PIPE. REFER TO CIVIL DRAWINGS FOR ROOFING & DETAILS
14. CENTER ON DRIVE-THRU WINDOW
15. STUCCO CONTROL JOINT
16. DOOR - PAINT XP-5
17. FRAME - PAINT XP-4
18. CENTER UNIT FIXTURE ON DOOR OR PLASTER AS SHOWN
19. PAINTED GRAPHIC XP-2
20. PAINTED GRAPHIC XP-3
21. VINYL WINDOW GRAPHIC TO BE FURNISHED BY OWNER & INSTALLED BY G.C. ON EXTERIOR FACE OF GLASS
22. GAS OR ELECTRCIAL METERS - PAINT XP-5

STUCCO SYSTEM SHALL BE 3 COAT CONSISTING of one layer of 30# FELT FOLLOWED BY SELF FURRING LATH W/ FELT BACKING,(2 LAYERS OF FELT TOTAL ACHIEVE DRAINAGE MATT) FOLLOWED BY 3/8" SCRATCH COAT, 3/8" BROWN COAT & 1/8" OMEGA FLEX" ACRYLIC TOP COAT. TOP COAT SHALL BE PIGMENTED WHITE TO MATCH R-2 COLOR. TEXTURE SHALL BE MEDIUM SAND. PROVIDE SAMPLE FOR OWNER APPROVAL TO INCLUDE COLOR MATCH & TEXTURE. EQUIVALENT MANUFACTURER'S PRODUCTS ARE ACCEPTABLE.

Rev.	By	Date

SCHLOTZSKY'S
@ VICTORY LAKETOWN CENTER
TRACT 7A NEC INTERSTATE HWY 45 & F.M.646
LEAGUE CITY, TEXAS 77573

ARCH®
Woo Associates, LLC.
ARCHITECTS - PLANNERS
13734 Branford Green Dr.
Houston, TX. 77083
(281) 530-3192

Date	09-01-2010
Scale	AS SHOWN
Drawn by	KW
Job#:	VICTORY LAKE

A3.1

PRODUCED BY AN AUTODESK EDUCATIONAL PRODUCT