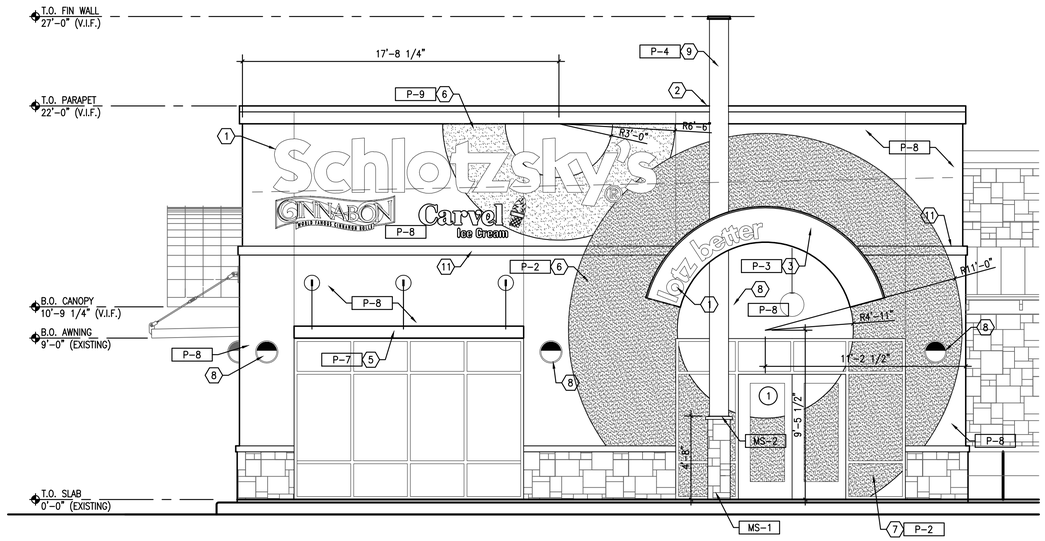

ELEVATION 1
SCALE: 1/4"=1'-0"

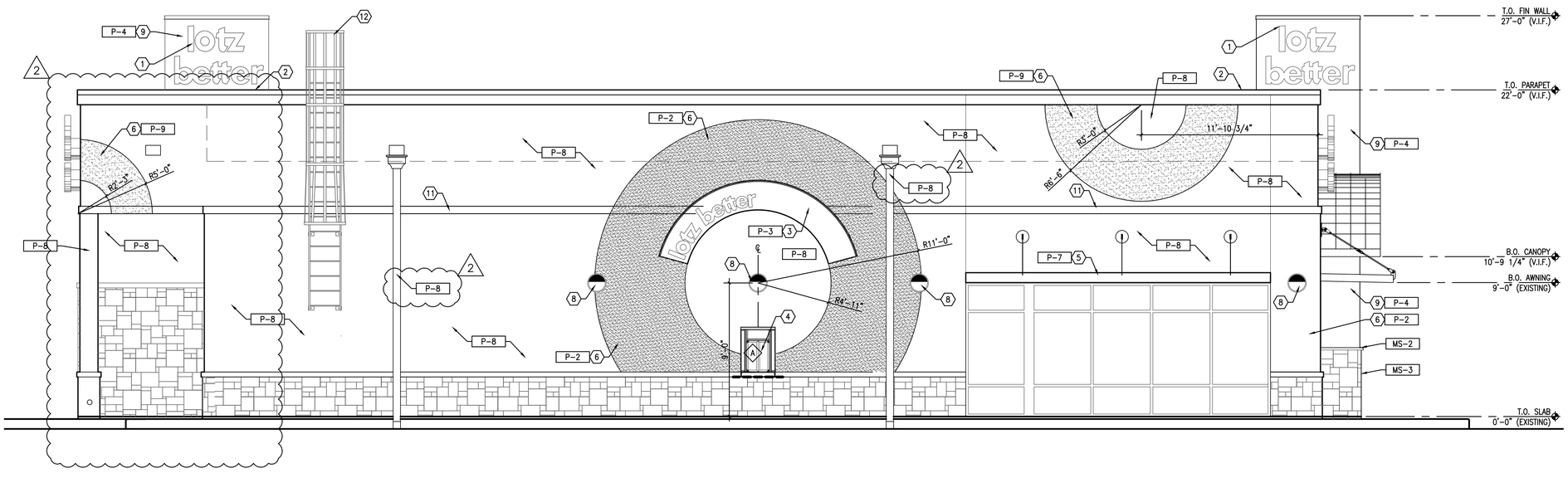

ELEVATION 2
SCALE: 1/4"=1'-0"

KEY NOTES:

1	NEW SIGNAGE BY OTHERS, G.C. TO COORDINATE BLOCKING AS REQUIRED
2	EXISTING ROOF, PATCH AND/OR REPAIR AS REQUIRED
3	PRE MANUFACTURED BARREL CANOPY BY UNISTRUCTURES, G.C. TO COORDINATE BLOCKING AS REQUIRED
4	NEW DRIVE THRU WINDOW; RE: WINDOW SCHEDULE
5	PRE MANUFACTURED AWNING BY UNISTRUCTURES, G.C. TO COORDINATE BLOCKING AS REQUIRED
6	PAINTED GRAPHIC
7	VINYL GRAPHIC FURNISHED BY OWNER AND INSTALLED BY G.C. ON EXTERIOR FACE OF GLASS. COLOR TO MATCH ADJACENT PAINTED GRAPHIC
8	LIGHT FIXTURE, RE: ELECTRICAL
9	NEW FIN WALL RE: 3/A3.1
10	EXISTING ELECTRICAL EQUIPEMENT
11	EXISTING TRIM TO REMAIN
12	EXISTING ROOF LADDER

FINISH SCHEDULE

WALLS AND WAINSCOT	
WC-1	KHAKI 54" WIDE
FRP-1	MARLITE
WT-1	12x12 TO 5'-0" A.F.F. TORTORA
MS-1	MANUFACTURED STONE
MS-2	MANUFACTURED STONE SILL
PAINT AND STAIN	
P-1	PURE WHITE
P-2	HOPSACK
P-3	POSITIVE RED
P-4	HUMOROUS GREEN
P-5	DAZZLE
P-6	OSAGE ORANGE
P-7	BLACK MAGIC
P-8	NOMADIC DESERT
P-9	DIVINE WHITE

ID STUDIO 4, LLC
1431 GREENWAY DR. SUITE 150
IRVING, TEXAS 75038
TEL: 972.870.1288
WWW.IDSTUDIO4.COM

CLIENT:
FOCUS Brands
301 S. CONGRESS ACE., STE 11000
AUSTIN, TX 78701
512.236.3600
www.focusbrands.com

NOT FOR CONSTRUCTION/
BID ONLY

12-15-11

SCHLOTZSKY'S DELI
THE TRAILS AT 620

8300 N. FM 620 STE 103
AUSTIN, TX. 78726

CLIENT: FOCUS Brands
301 S. CONGRESS AVE. STE 11000
AUSTIN, TX 78701

DATE	DESCRIPTION
11.21.11	ISSUE FOR PERMIT
12.16.11	ISSUE FOR BID

	DATE	DESCRIPTION
2	12.15.2011	LANDLORD BUILDING CHANGE

SHEET TITLE:
EXTERIOR ELEVATIONS

SHEET NUMBER:
A2.0

PROJECT NUMBER:
FOC11003