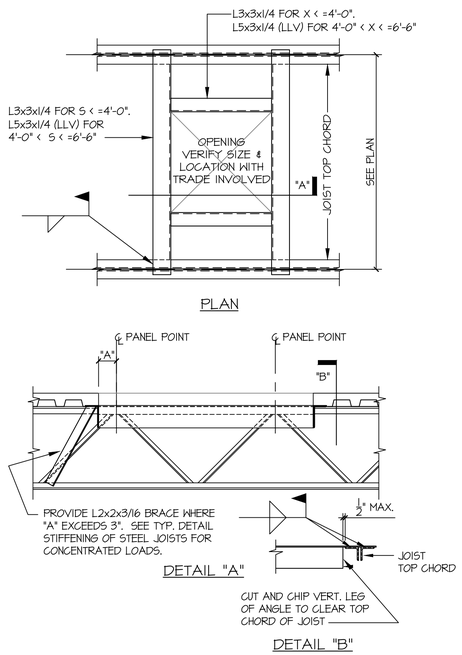

TYPICAL DETAIL
OPEN WEB STEEL JOIST
ROOF OPENING

NO SCALE 11

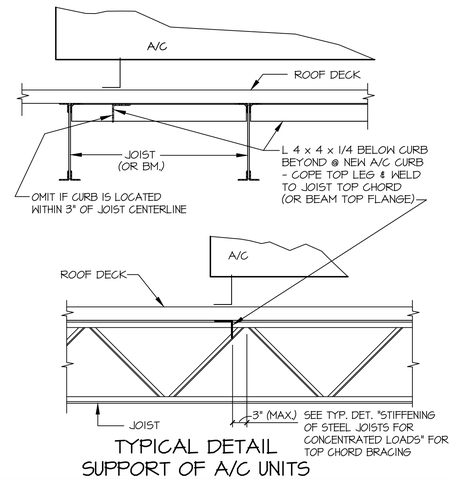

TYPICAL DETAIL
SUPPORT OF A/C UNITS

NO SCALE 9

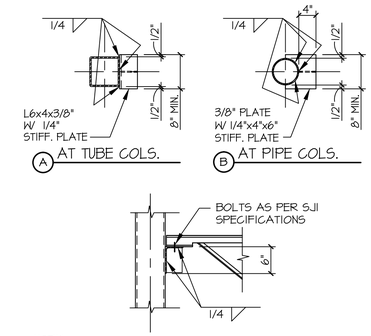

NOTES:
1. This detail for use with "K" series joist only.
2. Provide bolted connection as per SJI specifications.
3. All welds as per A.I.S.C. minimum or as required to develop joist reaction whichever is greater.

TYPICAL DETAIL
JOIST SEAT AT TUBE/PIPE COLUMN

NO SCALE 6

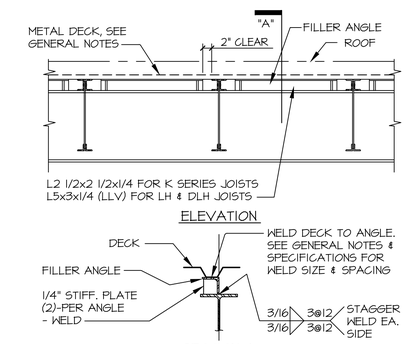

NOTES:
1. Provide filler angles at beams with diagonal braces or moment connections and at beams noted on plans/details.
2. Increase angle size or provide bent plates as required to match joist seats.

TYPICAL DETAIL
OPEN WEB STEEL JOIST DECK DIAPHRAGM
CONNECTION TO STEEL BEAM

NO SCALE 3

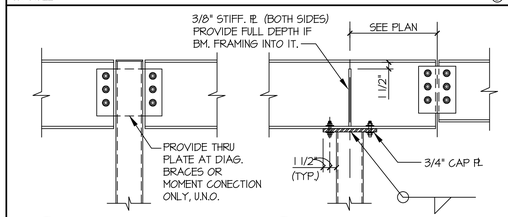

TYPICAL DETAIL
STEEL BEAM TO TUBE/PIPE - COL. CONNECTION

NO SCALE 8

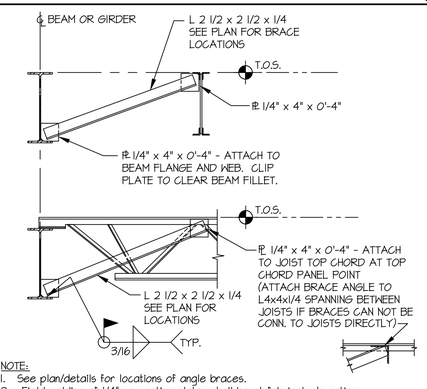

NOTE:
1. See plan/details for locations of angle braces.
2. Field welding of 1/4" connection plates shall be at fabricator's option.
3. All bracing shall be in place and welded before deck installation.
4. Brace sizes shown are typical unless noted otherwise on plan.
5. See General Notes for deck construction.

TYPICAL DETAIL
BEAM BOTTOM FLANGE BRACE
JOIST CONSTRUCTION

NO SCALE 5

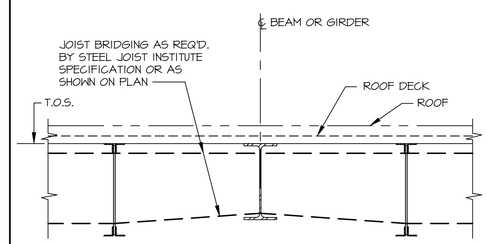

TYPICAL DETAIL
OPEN WEB STEEL JOIST
AT INTERIOR TIE BEAM, ROOF

NO SCALE 2

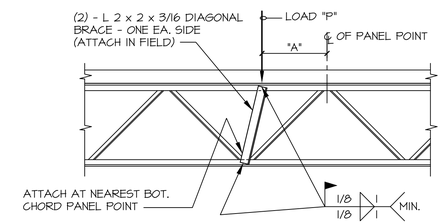

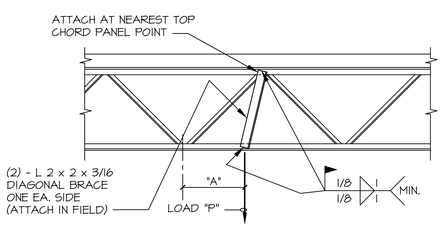

NOTES:
1. Diagonal brace is not required for "A" less than 3".
2. Provide diagonal brace at location of concentrated loads such as heavy pipes, mechanical units, heavy lights and any other concentrated loads as directed by engineer.
3. P = concentrated load.

TYPICAL DETAIL
STIFFENING OF STEEL JOIST
FOR CONCENTRATED LOADS

NO SCALE 10

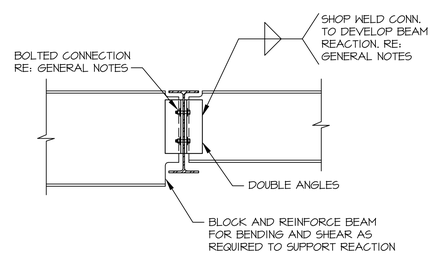

NOTES:
1. Refer to general notes for beam reaction design criteria.
2. Provide pre-designed connections as shown in AISC manual Part 4 where applicable.
3. Refer to general notes for bolt type.

TYPICAL DETAIL
BEAM TO BEAM DOUBLE ANGLE
SHEAR CONNECTION

NO SCALE 7

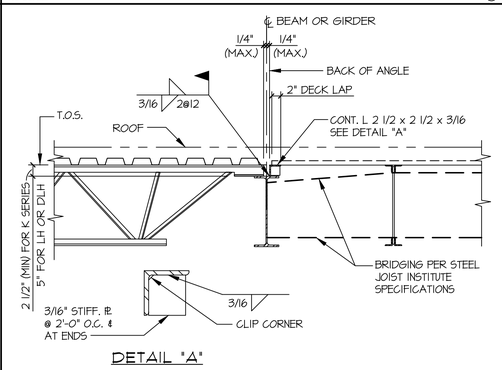

TYPICAL DETAIL
OPEN WEB STEEL JOIST
INTERIOR STEEL BEAM AT CHANGE
IN METAL DECK DIRECTION, ROOF

NO SCALE 4

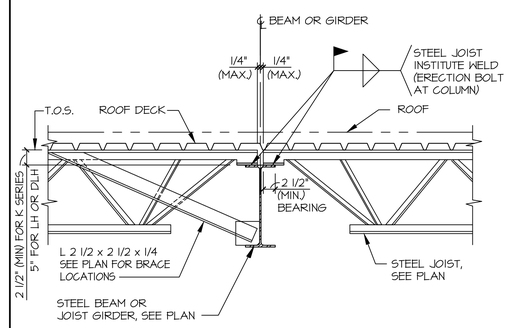

NOTES
1. When width of beam flange is less than 5 1/2", offset the location of joists on one side of beam.
2. Coordinate joist seats depth with Joist supplier.

TYPICAL DETAIL
OPEN WEB STEEL JOIST
AT INTERIOR STEEL BEAM, ROOF

NO SCALE 1

Hermes Architects
Members A.I.A.
1177 West Loop South, Ste. 500
Houston, Texas 77027
Tel. 713-785-3644
www.hermesarchitects.com
Houston•Dallas/ Ft. Worth

Matrix Structural Engineers
TBPE Firm Registration No. F-2640

STATE OF TEXAS
MOYEENUL HAQUE
72876
REGISTERED
PROFESSIONAL ENGINEER
11-11-11

Shaw's Jewelers
West Gray
1021 West Gray Ave.
Houston, Texas

Shaw's Jewelers
1014 West Gray Street
Houston, Texas 77019

DATE	08.31.2011
PROJECT NO.	1102100
DRAWN BY	KN
CHECKED BY	MH

FRAMING
DETAILS

S4.1

MSE# 11120

_____ OF _____

COPYRIGHT© 2011 Hermes Architects, Inc.