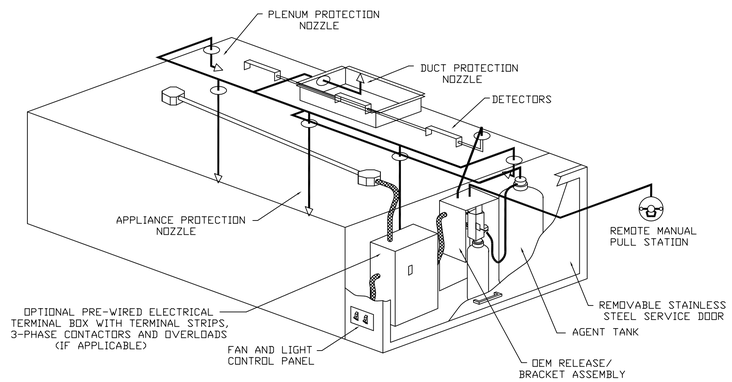

TYPICAL ANSUL R-102 SYSTEM LAYOUT

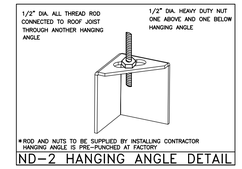

ND-2 HANGING ANGLE DETAIL

CAPTIVE-AIRE HOODS ARE BUILT IN COMPLIANCE WITH

NFPA #96
NSF
UL 710 & ULC710 STANDARDS
E.T.L. LISTED 3054804-001

ETL LISTING DESCRIPTION BLOCK
THE CAPTIVE AIRE MODEL ND HAS BEEN E.T.L. TESTED, LISTED, AND APPROVED TO EXHAUST A MINIMUM OF 150/200/250 CFM PER LINEAR FOOT OVER 450/600/700 DEGREE COOKING EQUIPMENT, RESPECTIVELY.

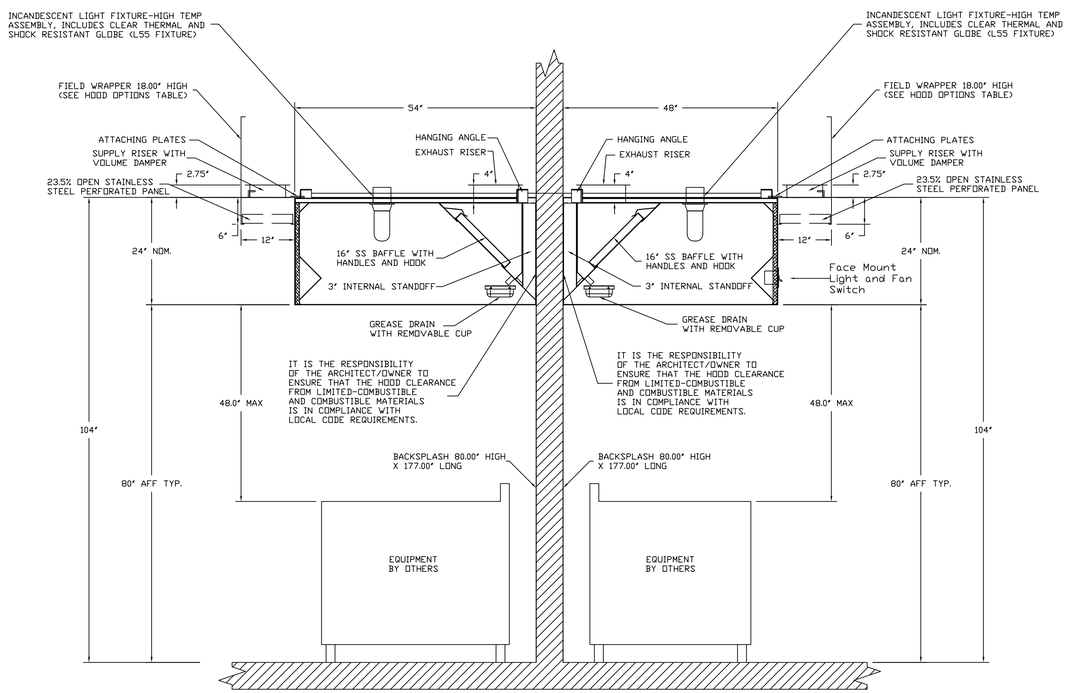

SECTION VIEW - MODEL 4824ND-2-PSP-F

PLAN VIEW - Hood #2
9' 6.00" LONG 5424ND-2-PSP-F

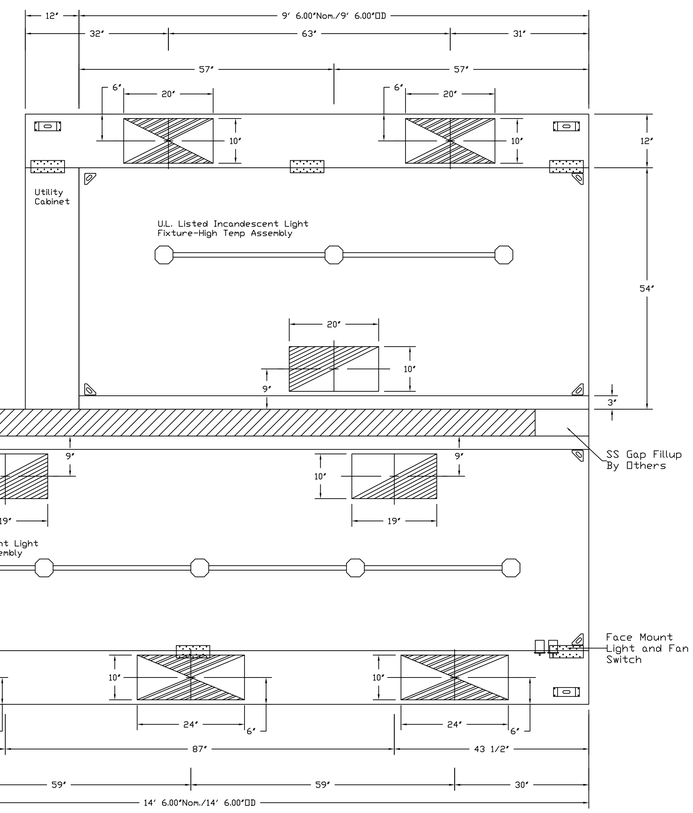

PLAN VIEW - Hood #1
14' 6.00" LONG 4824ND-2-PSP-F
NOTE: Additional hanging angles provided for hoods longer than 12 ft.