MECHANICAL EQUIPMENT CONNECTION SCHEDULE

DESCRIPTION	CIRCUIT	CONDUCTORS	STARTER/ DISCONNECT	NOTES
RTU-1	HA-2/4/6	3#10,1#10G-1/2"C	30/3/3R	.
RTU-2	HA-8/10/12	3#10,1#10G-1/2"C	30/3/3R	.
RTU-3	HA-14/16/18	3#10,1#10G-1/2"C	30/3/3R	.
.	.	.	.	.
EF-1	A-43	2#12,1#12G-1/2"C	$M	.
EF-2	A-43	2#12,1#12G-1/2"C	$M	.
EF-3	A-61/63/65	2#12,1#12G-1/2"C	$M	.
EF-4	A-67/69/71	2#12,1#12G-1/2"C	$M	.
EF-5	A-73/75/77	2#12,1#12G-1/2"C	$M	.
EF-6	A-66	2#12,1#12G-1/2"C	$M	.
EF-7	A-79/81/83	2#12,1#12G-1/2"C	$M	.
.	.	.	.	.
SF-1	B-2/4/6	2#12,1#12G-1/2"C	$M	.
SF-2	B-8/10/12	2#12,1#12G-1/2"C	$M	.
MUA-1	HA-20/22/24	3#6,1#10G-1"C	60/3/3R	.
WH-1	A-38	2#12,1#12G-1/2"C	CIRCUIT BREAKER.	
WH-2	HA-26/28/30	2#12,1#12G-1/2"C	30/3/1	

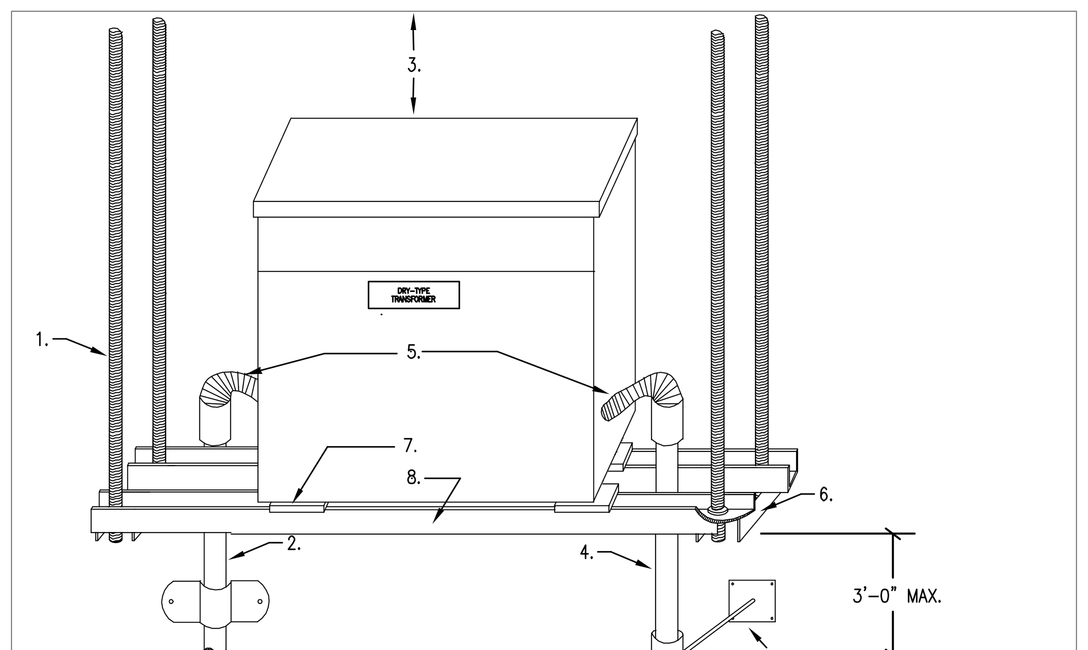

1. GALVANIZED THREADED ROD- FOUR REQUIRED.
2. PRIMARY RACEWAY.
3. MAINTAIN 12" CLEARANCE BETWEEN TOP OF TRANSFORMER AND CEILING OR OTHER OBSTRUCTION.
4. SECONDARY RACEWAY.
5. FLEXIBLE CONDUIT MAX. LENGTH - 18".
6. PROVIDE LATERAL (SWAY) BRACING SECURED TO STRUCTURE.
7. NEOPHRENE VIBRATION INSULATING PAD WITH THROUGH BOLT.
8. GALVANIZED STEEL SUPPORT CHANNEL

SUSPENDED TRANSFORMER INSTALLATION

NOT TO SCALE

PANELBOARD SCHEDULE - "B"

MAIN: 100A MCB | BKR TYPE: SHUNT TRIP | VOLTAGE: 208/120 | PHASE: 3 | WIRE: 4 | MOUNTING: SURFACE | AIC: 22K

CKT #	TRIP POLE	DESCRIPTION	LTG	REC	MTR	A/C	HTG	KIT	MISC	LTG	REC	MTR	A/C	HTG	KIT	MISC	DESCRIPTION	TRIP POLE	CKT #
1	20/1	JB-EXHAUST HOOD	1.8									0.6					SF-1	15/3	2
3	20/1	REC-FRY DUMP STATION		0.8								0.6					--	--	4
5	20/1	REC-CONVENTION OVEN		1.3								0.6					--	--	6
7	20/1	REC-CONVENTION OVEN		1.3								0.3					SF-2	15/3	8
9		SPACE										0.3					--	--	10
11		SPACE										0.3					--	--	12

LIGHTING (KVA):	1.8	1.8 / 3.4 / 0.0 / 0.0 / 0.0 / 0.0 / 0.0 — 0.0 / 0.0 / 2.7 / 0.0 / 0.0 / 0.0 / 0.0	CONNECTED LOAD (KVA):	7.9
RECEPTACLES (KVA):	3.4		DEMAND LOAD (KVA):	7.9
MOTORS (KVA):	2.7	PHASE A 4 33.2		
A/C (KVA):	0.0	PHASE B 2 14.4	CONNECTED LOAD (AMPS):	21.9
HEATING (KVA):	0.0	PHASE C 2 18.2	DEMAND LOAD (AMPS):	21.9
KITCHEN (KVA):	0.0	KVA AMPS		
MISCELLANEOUS (KVA):	0.0		AMPACITY REQUIRED:	23.6

NOTE: BREAKERS PROTECTING MULTI-WIRE BRANCH CIRCUITS SHALL BE EQUIPPED WITH A PAD-LOCK DEVICE SO THAT CIRCUITS CAN BE DISCONNECTED SIMULTANEOUSLY.

AMPACITY REQD CALCS (PANEL 'HA')

LIGHTING		10.43	KVA X 125 %	=	13.0 KVA
RECEPTACLE	TOTAL	3.44	KVA		
	1ST	10.00	KVA X 100 %	=	3.4 KVA
	REMAIN	0.00	KVA X 50 %	=	0.0 KVA
MOTORS	TOTAL	38.34	KVA X 100 %		
	LARGEST	10.30	KVA X 125 %	=	12.9 KVA
	REMAIN	28.04	KVA X 100 %	=	28.0 KVA
A/C		49.20	KVA X 100 %	=	49.2 KVA
HEATING		12.06	KVA X 100 %	=	12.1 KVA
LOCKED-OUT LOAD		____	KVA X 100 %	=	0.0 KVA
KITCHEN		72.34	KVA X 65 %	=	47.0 KVA
MISCELLANEOUS		0.20	KVA X 100 %	=	0.2 KVA
TOTAL				=	165.9 KVA

PANEL 'HA'

AMPACITY REQD CALCS (PANEL 'A')

LIGHTING		8.63	KVA X 125 %	=	10.8 KVA
RECEPTACLE	TOTAL	0.00	KVA		
	1ST	10.00	KVA X 100 %	=	0.0 KVA
	REMAIN	0.00	KVA X 50 %	=	0.0 KVA
MOTORS	TOTAL	9.07	KVA X 100 %		
	LARGEST	1.20	KVA X 125 %	=	1.5 KVA
	REMAIN	7.87	KVA X 100 %	=	7.9 KVA
A/C		0.00	KVA X 100 %	=	0.0 KVA
HEATING		0.00	KVA X 100 %	=	0.0 KVA
LOCKED-OUT LOAD		____	KVA X 100 %	=	0.0 KVA
KITCHEN		72.34	KVA X 65 %	=	47.0 KVA
MISCELLANEOUS		0.20	KVA X 100 %	=	0.2 KVA
TOTAL				=	67.4 KVA

PANEL 'A'

AMPACITY REQD CALCS (PANEL 'B')

LIGHTING		1.80	KVA X 125 %	=	2.3 KVA
RECEPTACLE	TOTAL	3.44	KVA		
	1ST	10.00	KVA X 100 %	=	3.4 KVA
	REMAIN	0.00	KVA X 50 %	=	0.0 KVA
MOTORS	TOTAL	2.67	KVA X 100 %		
	LARGEST	0.60	KVA X 125 %	=	0.8 KVA
	REMAIN	2.07	KVA X 100 %	=	2.1 KVA
A/C		0.00	KVA X 100 %	=	0.0 KVA
HEATING		0.00	KVA X 100 %	=	0.0 KVA
LOCKED-OUT LOAD		____	KVA X 100 %	=	0.0 KVA
KITCHEN		0.00	KVA X 65 %	=	0.0 KVA
MISCELLANEOUS		0.00	KVA X 100 %	=	0.0 KVA
TOTAL				=	8.5 KVA

PANEL 'B'

DEMAND LOAD CALCS

LIGHTING		10.43	KVA X 100 %	=	10.4 KVA
RECEPTACLE	TOTAL	3.44	KVA		
	1ST	10.00	KVA X 100 %	=	3.4 KVA
	REMAIN	0.00	KVA X 50 %	=	0.0 KVA
MOTORS		11.74	KVA X 100 %	=	11.7 KVA
A/C		0.00	KVA X 100 %	=	0.0 KVA
HEATING		0.00	KVA X 100 %	=	0.0 KVA
LOCKED-OUT LOAD		____	KVA X 100 %	=	0.0 KVA
KITCHEN		72.34	KVA X 65 %	=	47.0 KVA
MISCELLANEOUS		0.00	KVA X 100 %	=	0.0 KVA
TOTAL				=	72.6 KVA

75KVA TRANSFORMER-'TA'

PANELBOARD SCHEDULE - "A"

MAIN: 250A MCB | VOLTAGE: 208/120 | PHASE: 3 | WIRE: 4 | MOUNTING: SURFACE | AIC: 22K

CKT #	TRIP POLE	DESCRIPTION	LTG	REC	MTR	A/C	HTG	KIT	MISC	LTG	REC	MTR	A/C	HTG	KIT	MISC	DESCRIPTION	TRIP POLE	CKT #
1	20/1	REC-TEA BREWER						1.8							1.8		REC-LANDING TABLE	20/1	2
3	20/2	JB-COFFEE BREWER													1.8		REC-HOT FOOD TABLE	20/2	4
5	--	--													1.8		--	--	6
7	20/1	REC-BEVERAGE COUNTER						1.8							1.0		JB-HEAT LAMP	20/1	8
9	60/3	JB-DISHWASHER						5.4							1.7		REC-RAISED RAIL PREP TABLE	20/1	10
11	--	--						5.4							0.8		REC-UNDERCOUNTER REFRIGERATOR	20/1	12
13	--	--						5.4							2.5		JB-HOT FOOD TABLE	30/2	14
15	20/2	JB-ICE MACHINE,STORAGE BIN,FILTER						2.0							2.5		--	--	16
17	--	--						2.0							1.8		REC-DELI CASE	20/1	18
19	20/2	JB-FREEZER EVAPORATOR COIL			1.2										1.8		REC-DELI CASE	20/1	20
21	--	--			1.2										1.2		REC-GELATO CASE	20/2	22
23	20/1	JB-WALK-IN FREEZER & COOLER			1.0										1.2		--	--	24
25	20/1	JB-COOLER EVAPORATOR COIL			0.9			0.6							1.8		REC-MILLWORK COUNTER	20/1	26
27	20/1	SPARE													0.8		REC-PANINI GRILL	20/2	28
29	20/1	SPARE													0.8		--	--	30
31	20/1	SPARE													0.8		REC-REFRIGERATED PREP TABLE	20/1	32
33	20/1	REC-PREP TABLE WITH SINK						1.8							0.8		REC-FOOD SLICER	20/1	34
35	20/1	SPARE													0.6		JB-FIRE SUPPRESSION SYSTEM	20/1	36
37	20/1	SPARE														0.2	WH-1	20/1	38
39	20/1	SPARE													1.0		REC-REACH IN REGRIGERATOR	20/1	40
41	20/1	JB-RAISED RAIL PREP TABLE						1.7							0.3		REC-PIZZA OVEN	20/1	42
		SECTION 2															SECTION 2		
43	20/1	LIGHTS, EF-1, EF-2	1.1		0.1										1.9		JB-COFFEE BREWER	20/2	44
45	20/1	JB-FUTURE PURPOSE	1.0												1.9		--	--	46
47	20/1	LIGHTS	0.9												2.3		JB-ESPRESSO MACHINE	30/2	48
49	20/1	LIGHTS	1.1												2.3		--	--	50
51	20/1	LIGHTS	1.1												1.8		REC-TEA BREWER	20/1	52
53	20/1	LIGHTS	0.5												1.7		REC-RAISED RAIL PREP TABLE	20/1	54
55	20/1	JB-FUTURE PURPOSE	1.0												1.8		REC-PREP TABLE WITH SINK	20/1	56
57	20/1	JB-FUTURE PURPOSE	1.0												0.8		REC-REFRIGERATED TABLE W/WOOD	20/1	58
59	20/1	LIGHTS	1.0												0.8		REC-PASTA MACHINE	20/2	60
61	15/3	EF-3			0.4										0.8		--	--	62
63	--	--			0.4										1.3		REC-FOOD MIXER	20/1	64
65	--	--			0.4							0.5					EF-6	15/1	66
67	15/3	EF-4			0.4												SPACE		68
69	--	--			0.4												SPACE		70
71	--	--			0.4												SPACE		72
73	15/3	EF-5			0.4												SPACE		74
75	--	--			0.4												SPACE		76
77	--	--			0.4												SPACE		78
79	15/3	EF-7			0.2												SPACE		80
81	--	--			0.2												SPACE		82
83	--	--			0.2												SPACE		84

LIGHTING (KVA):	8.6	8.6 / 0.0 / 8.6 / 0.0 / 0.0 / 27.9 / 0.0 — 0.0 / 0.0 / 0.5 / 0.0 / 0.0 / 44.5 / 0.2	CONNECTED LOAD (KVA):	90.2
RECEPTACLES (KVA):	0.0		DEMAND LOAD (KVA):	64.9
MOTORS (KVA):	9.1	PHASE A 33 275.6		
A/C (KVA):	0.0	PHASE B 31 254.7	CONNECTED LOAD (AMPS):	250.5
HEATING (KVA):	0.0	PHASE C 27 221.7	DEMAND LOAD (AMPS):	180.2
KITCHEN (KVA):	72.3	KVA AMPS		
MISCELLANEOUS (KVA):	0.2		AMPACITY REQUIRED:	187.0

NOTE: BREAKERS PROTECTING MULTI-WIRE BRANCH CIRCUITS SHALL BE EQUIPPED WITH A PAD-LOCK DEVICE SO THAT CIRCUITS CAN BE DISCONNECTED SIMULTANEOUSLY.

PANELBOARD SCHEDULE - "HA"

MAIN: 250A MLO | VOLTAGE: 480/277 | PHASE: 3 | WIRE: 4 | MOUNTING: SURFACE | AIC: 42K

CKT #	TRIP POLE	DESCRIPTION	LTG	REC	MTR	A/C	HTG	KIT	MISC	LTG	REC	MTR	A/C	HTG	KIT	MISC	DESCRIPTION	TRIP POLE	CKT #
1	110/3	XFMR 'TA'	4.9	1.3	4.5	0.0	0.0	26.2	0.2				5.2				RTU-1	25/3	2
3	--	(PANEL 'A'+'B')	3.1	0.8	3.5	0.0	0.0	24.9	0.0				5.2				--	--	4
5	--	--	2.5	1.3	3.8	0.0	0.0	21.3	0.0				5.2				--	--	6
7		SPACE											6.1				RTU-2	25/3	8
9		SPACE											6.1				--	--	10
11		SPACE											6.1				--	--	12
13		SPACE											5.2				RTU-3	25/3	14
15		SPACE											5.2				--	--	16
17		SPACE											5.2				--	--	18
19		SPACE										8.9					MUA-1	45/3	20
21		SPACE										8.9					--	--	22
23		SPACE										8.9					--	--	24
25		SPACE												4.0			WH-2	20/3	26
27		SPACE												4.0			--	--	28
29		SPACE												4.0			--	--	30
31		SPACE																	32
33		SPACE															SPACE		34
35		SPACE															SPACE		36
37		SPACE															SPACE		38
39		SPACE															SPACE		40
41		SPACE															SPACE		42

LIGHTING (KVA):	10.4	10.4 / 3.4 / 11.7 / 0.0 / 0.0 / 72.3 / 0.2 — 0.0 / 0.0 / 26.6 / 49.2 / 12.1 / 0.0 / 0.0	CONNECTED LOAD (KVA):	186.0
RECEPTACLES (KVA):	3.4		DEMAND LOAD (KVA):	160.7
MOTORS (KVA):	38.3	PHASE A 66 239.5		
A/C (KVA):	49.2	PHASE B 62 222.3	CONNECTED LOAD (AMPS):	223.7
HEATING (KVA):	12.1	PHASE C 58 209.7	DEMAND LOAD (AMPS):	193.3
KITCHEN (KVA):	72.3	KVA AMPS		
MISCELLANEOUS (KVA):	0.2		AMPACITY REQUIRED:	199.5

NOTE: BREAKERS PROTECTING MULTI-WIRE BRANCH CIRCUITS SHALL BE EQUIPPED WITH A PAD-LOCK DEVICE SO THAT CIRCUITS CAN BE DISCONNECTED SIMULTANEOUSLY.

TRANSFORMER SCHEDULE

XFMR.	SIZE (KVA)	VOLTAGE PRI.	VOLTAGE SEC.	CONFIGURATION PRI.	CONFIGURATION SEC.	GROUNDING ELECTRODE	NOTES
T-A	75	480/277	208/120	3Ø DELTA	3Ø WYE	#4 CU	.

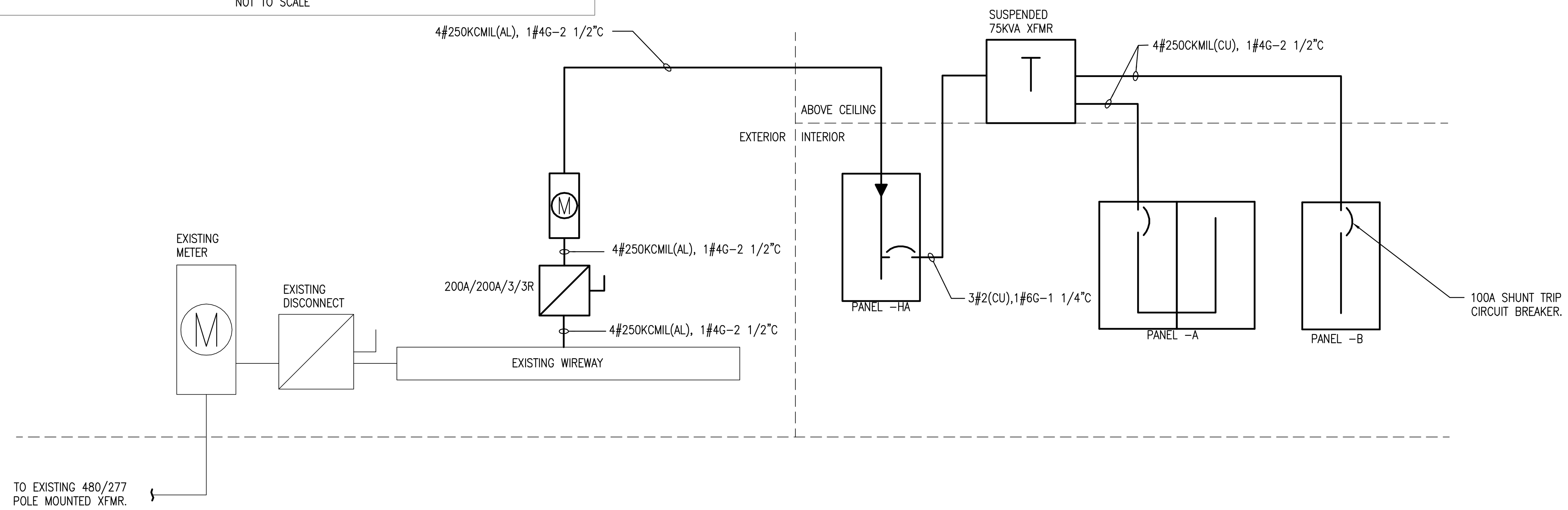

1 ELECTRICAL RISER DIAGRAM

SCALE: NOT TO SCALE

Jordan & Skala Engineers
11231 Richmond Ave., Suite D104
Houston, TX 77082
V: (281) 617-3200 F: (281) 617-3207
Project Number - 106-0634 Texas Firm Registration # F-4990
Drawn By: JSE Checked By: JSE

CISNEROS DESIGN STUDIO, ARCHITECTS LLC
4621 Montrose Blvd. Suite B220 Houston, Texas 77006
(PH) 713-520-7745 (FAX) 713-520-8894

COPYRIGHT 2011
Drawings and Specifications as instruments of service are and shall remain the property of the Architect. They are not to be used on other projects or extensions to this project except by agreement in writing and with appropriate compensation to the Architect. Contractor is responsible for confirming and correlating dimensions at job site; the Architect will not be responsible for construction means, methods, techniques, sequences or procedures; or for safety precautions and programs in connection with the project.
CISNEROS DESIGN STUDIO, ARCHITECTS LLC

DAMICO'S RESTAURANT
2802 WHITE OAK, SUITE 500
HOUSTON, TX 77007

ARCHITECT:

ENGINEER:

STATE OF TEXAS REX DRAKE 90630 LICENSED PROFESSIONAL ENGINEER F-4990 15FEB11

REVISIONS:

DATE ISSUED: 15 FEB. 2011

SHEET: RISER DIAGRAM & PANEL SCHEDULES

E-1.1