NORITZ

Model N-0751M-OD
Tankless Water Heater

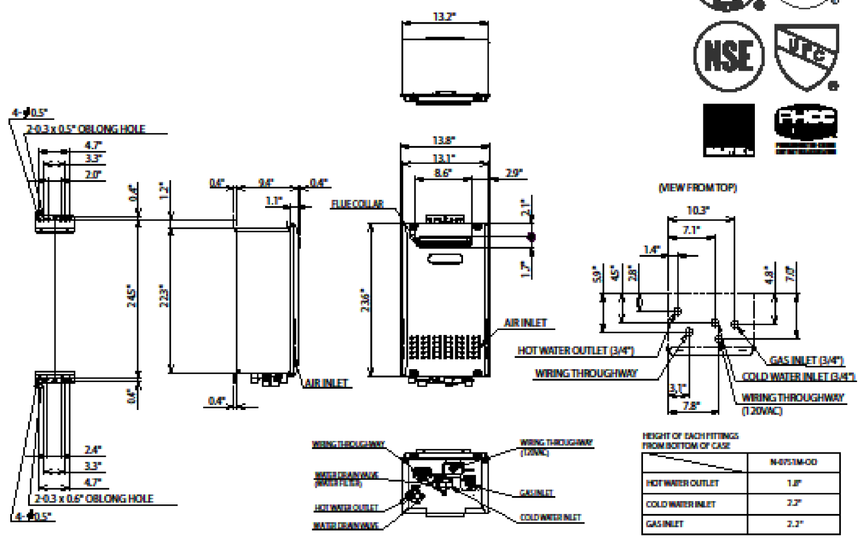

HEIGHT OF EACH FITTINGS FROM BOTTOM OF CASE

	N-0751M-OD
HOT WATER OUTLET	1.8"
COLD WATER INLET	2.2"
GAS INLET	2.2"

* This model is eligible for the Federal tax credit of up to 30% of the water heater and installation costs (up to $1,500) when installed in a residence between 1/1/2009 through 12/31/2010.

Item		Specification
Model Name		N-0751M-OD
Type	Installation	Outdoor, Wall Hung
	Air Supply/Exhaust	Power Vented
Ignition		Direct Ignition
Operating Water Pressure		15 - 150 PSI
Minimum Flow Rate		0.5 GPM
Gas Supply Pressure		NG : 4.0" - 10.5" LP : 8.0" - 14.0"
Dimensions		23.6"(Height) x 13.8"(Width) x 9.4"(Depth)
Weight		47 (pounds)
Water Holding Capacity		0.2 Gallon
Connection Sizes	Water Inlet	3/4"
	Hot Water Outlet	3/4"
	Gas Inlet	3/4"
Power	Supply	120VAC(60Hz)
	Consumption	NG: 64W LP: 77W Freeze Prevention 145W
Material	Casing	Zincified Steel Plate / Polyester Coating
	Flue Collar	Stainless Steel
	Heat Exchanger	Copper Sheeting, Copper Tubing
Safety Devices		Flame Rod, Thermal Fuse, Lightning Protection Device (ZNR), Overheat Prevention Device, Freezing Prevention Device, Fan Rotation Detector
Included Accessories		Remote Controller, Remote Controller Cord, Anchoring Screws
Optional Accessories		Isolation Valves (RIK-WV-4), Recess Box (RB-4), Pipe Cover (RPC-25), Remote Controller Outdoor Junction Box (RRC-OJB), ScaleShield (RSS-HB-1), Quick-Connect Cable (RQC-1 M)

NORITZ AMERICA CORPORATION
11160 Grace Avenue, Fountain Valley, CA 92708 Tel. 1-866-7NORITZ www.noritz.com

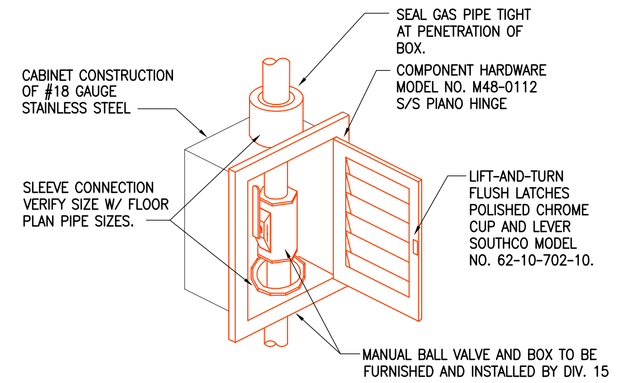

NOTE: INSTALL MANUAL VALVE IN BOX UPSTREAM OF ANSUL VALVE.

9 KITCHEN MANUAL VALVE BOX
SCALE: NONE

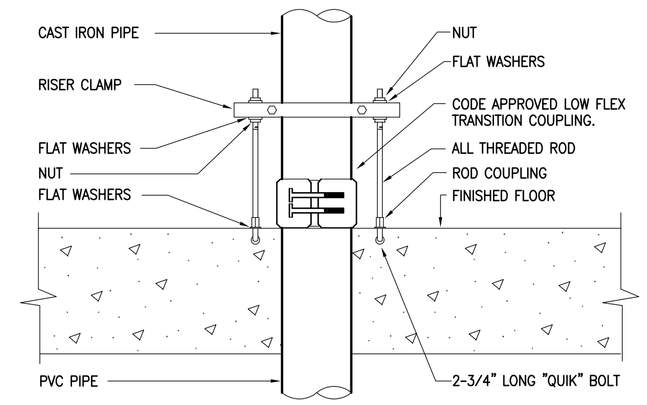

NOTE:
THERE IS TO BE NO EXPOSED PVC ABOVE SLAB.

6 CAST IRON TO PVC PIPE TRANSITION
SCALE: NONE

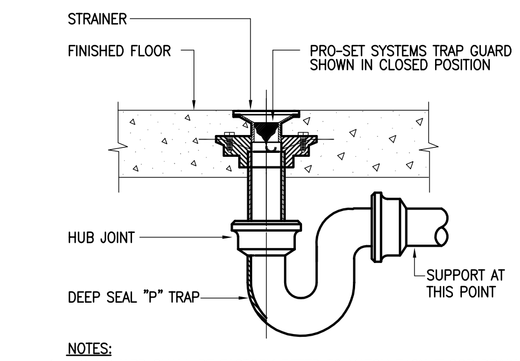

NOTES:
1. TRAP GUARD SHALL BE FACTORY FITTED TO MATCH EACH FLOOR DRAIN (AND FLOOR SINK) BY SIZE, MODEL, AND MANUFACTURER.
2. FLOOR SINK/HUB DRAIN TRAP GUARD INSTALLATION IS SIMILAR.
3. INSTALLATION OF TRAP GUARD TO BE IN ACCORDANCE WITH MANUFACTURER'S RECOMMENDATIONS.
4. INSERT TRAP GUARD ONLY AFTER FINAL RODDING OF DRAINS. INSTALL TRAP GUARD WITH CLEAR SILICONE CAULK FOR GAS TITE SEAL. FOR DRAIN RODDING AFTER INSTALLATION, INSERT SEWER TAPE THROUGH LIGHTLY GREASED 1-1/2" PVC PIPE TO PROTECT TRAP GUARD.

3 FLOOR DRAIN WITH TRAP SEAL PROTECTION
SCALE: NONE

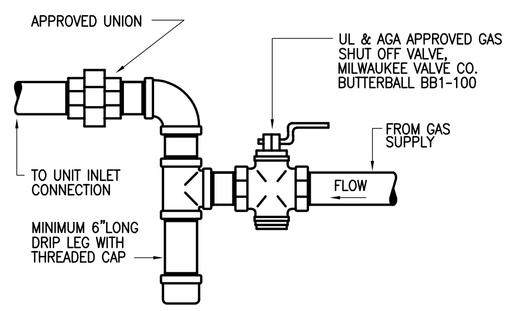

8 GAS CONNECTION TO EQUIPMENT
SCALE: NONE

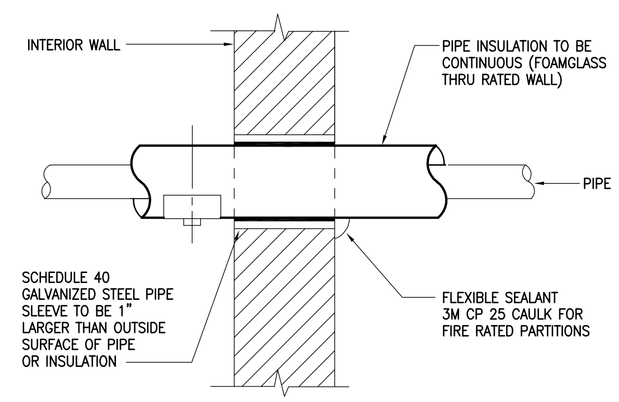

5 INTERIOR WALL PENETRATION
SCALE: NONE

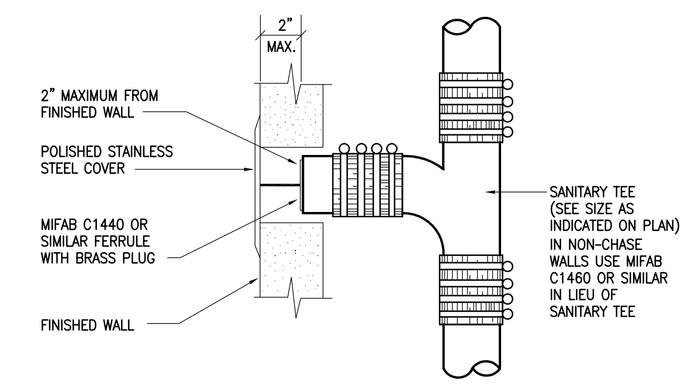

2 WALL CLEANOUT
SCALE: NONE

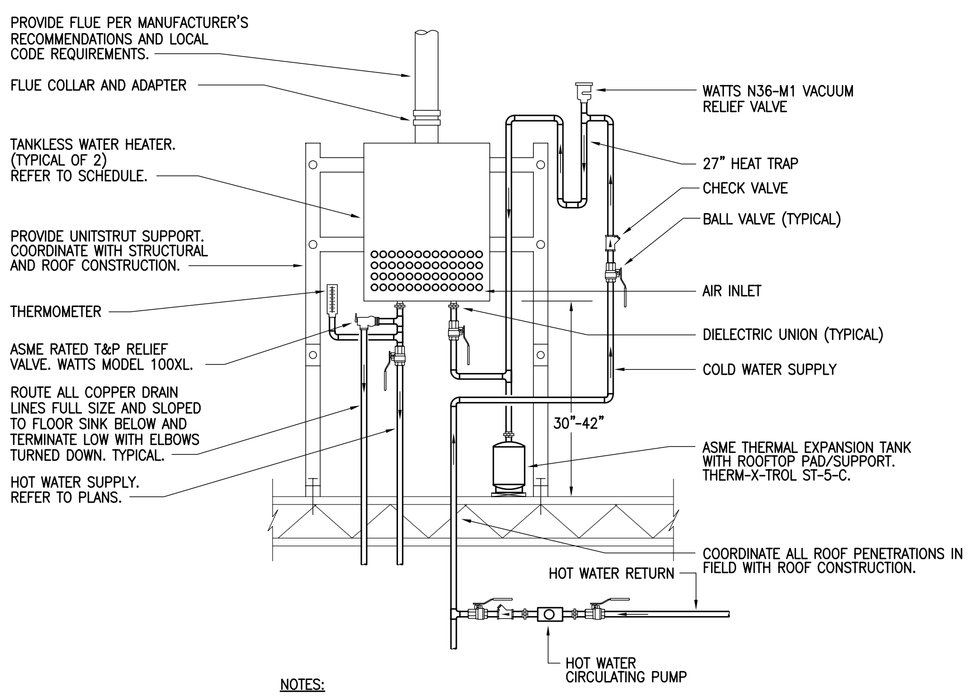

NOTES:
1. PROVIDE UNIT IN READILY ACCESSIBLE LOCATION, IN COMPLIANCE WITH LOCAL CODES. COORDINATE FINAL LOCATION AND INSTALLATION WITH ARCHITECT AND/OR OWNER.
2. PROVIDE 1" PIPE INSULATION HAVING A CONDUCTIVITY NOT EXCEEDING 0.28 BTU PER INCH/HR x S.F. x °F ON ALL DOMESTIC WATER PIPING. PROVIDE JACKETING FOR ALL EXPOSED PIPING.

7 GAS INSTANTANEOUS WATER HEATER DETAIL
SCALE: NONE

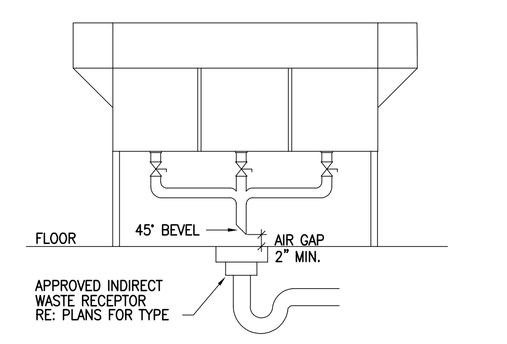

NOTE: INDIRECT WASTE PIPING FOR OTHER SINKS/EQUIPMENT IS SIMILAR.

4 THREE COMPARTMENT SINK
SCALE: NONE

MINIMUM DIMENSIONS OF GALVANIZED SHEETMETAL PROTECTION SHIELDS AT PIPE HANGERS		
NOMINAL SIZE PIPE	SHIELD LENGTH (IN.)	GAUGE THICKNESS
1/2" - 2-1/2"	12	18
3" - 4"	16	18

NOTE:
SIZING OF ALL PIPE SUPPORTS FROM BUILDING STRUCTURAL SYSTEM SHALL BE APPROVED BY STRUCTURAL ENGINEER PRIOR TO INSTALLATION.

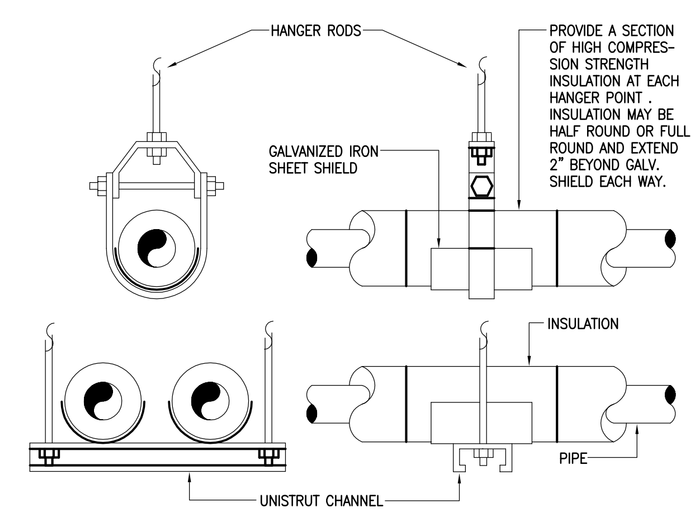

1 HANGER FOR WATER PIPING
SCALE: NONE

ISSUE

02/28/12 ISSUED FOR PERMIT AND PRICING

HARRELL ARCHITECTS, LP
9575 Katy Frwy., #200
Houston, Texas 77024
tel: 713.722.7071
fax: 713.722.7072

CONSULTANTS

Holste & Associates, Inc.
Consulting Engineers • Texas Reg. F-5443
6671 Southwest Frwy., Suite 850
Houston, Texas 77074 (713) 995-1351
www.holstemep.com
Contact: Kris Odom (832) 643-0368

PROJECT NAME

Cafe Express Restaurant

PROJECT ADDRESS

1111 Eldridge Parkway #100
Houston, Texas 77077

PROJECT NUMBER

11052

SHEET NAME

PLUMBING DETAILS

SHEET NUMBER

P2.1